US009358178B1

(12) **United States Patent**
Morgan

(10) **Patent No.: US 9,358,178 B1**
(45) **Date of Patent: Jun. 7, 2016**

(54) **CARDIOPULMONARY RESUSCITATION DEVICE**

(71) Applicant: **Brent F. Morgan**, Glendale, AZ (US)

(72) Inventor: **Brent F. Morgan**, Glendale, AZ (US)

(*) Notice: Subject to any disclaimer, the term of this patent is extended or adjusted under 35 U.S.C. 154(b) by 0 days.

(21) Appl. No.: **14/849,497**

(22) Filed: **Sep. 9, 2015**

(51) **Int. Cl.**
A61H 31/00 (2006.01)

(52) **U.S. Cl.**
CPC ***A61H 31/005*** (2013.01); ***A61H 31/007*** (2013.01); *A61H 2201/5043* (2013.01); *A61H 2201/5048* (2013.01); *A61H 2201/5064* (2013.01)

(58) **Field of Classification Search**
CPC A61H 31/00; A61H 2031/001–2031/003; A61H 31/004; A61H 31/005; A61H 31/007; A61H 31/008; A61H 2201/5043; A61H 2201/5048; A61H 2201/5064
See application file for complete search history.

(56) **References Cited**

U.S. PATENT DOCUMENTS

5,487,722 A *	1/1996	Weaver, II	A61H 31/007	601/1
5,496,257 A *	3/1996	Kelly	A61H 31/005	600/454
6,306,107 B1 *	10/2001	Myklebust	A61B 5/1036	128/897
7,122,014 B2 *	10/2006	Palazzolo	A61B 5/04012	601/41
7,310,553 B2 *	12/2007	Freeman	A61H 31/005	601/41
8,942,800 B2 *	1/2015	Thiagrajan	A61N 1/3993	607/3
2010/0049266 A1 *	2/2010	Ochs	A61H 31/005	607/5
2010/0234908 A1 *	9/2010	Didon	A61N 1/39	607/5
2012/0083720 A1 *	4/2012	Centen	A61H 31/005	601/41
2015/0120201 A1 *	4/2015	Silver	A61H 31/00	702/19
2015/0257971 A1 *	9/2015	Chapman	A61H 31/00	601/21

* cited by examiner

Primary Examiner — Steven Douglas
(74) *Attorney, Agent, or Firm* — Morgan Law Offices, PLC

(57) **ABSTRACT**

A cardiopulmonary resuscitation device includes a case having an extension portion extending therefrom. In operation, the user places the case across the chest of a person being given CPR, and presses the case into the person's chest, applying uniform force in according to a rhythm guided by audible and/or visual feedback. The cardiopulmonary resuscitation device includes a control circuit having a display screen, and a distance sensor apparatus operatively coupled to the control circuit. The distance sensor apparatus is carried by the extension portion which can be situated over the edge of the person, and provides a sensor signal to the control circuit in response to movement of the case. The display screen displays a distance and rate that the case has been moved during CPR, and both an audible sound and visual light are emitted each time the device is applied properly to the person receiving CPR. The device is automatically activated once a certain amount force is applied to the case.

19 Claims, 13 Drawing Sheets

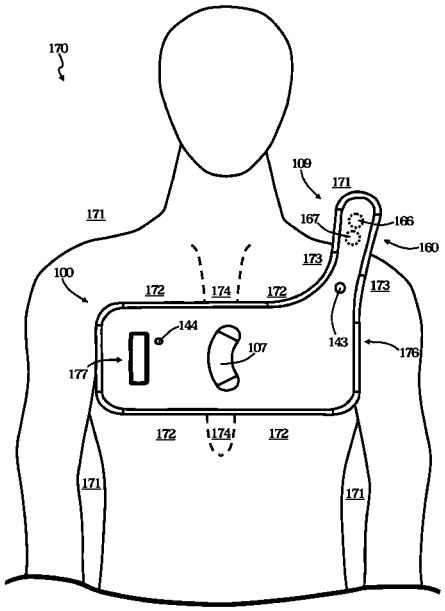

FIG. 1

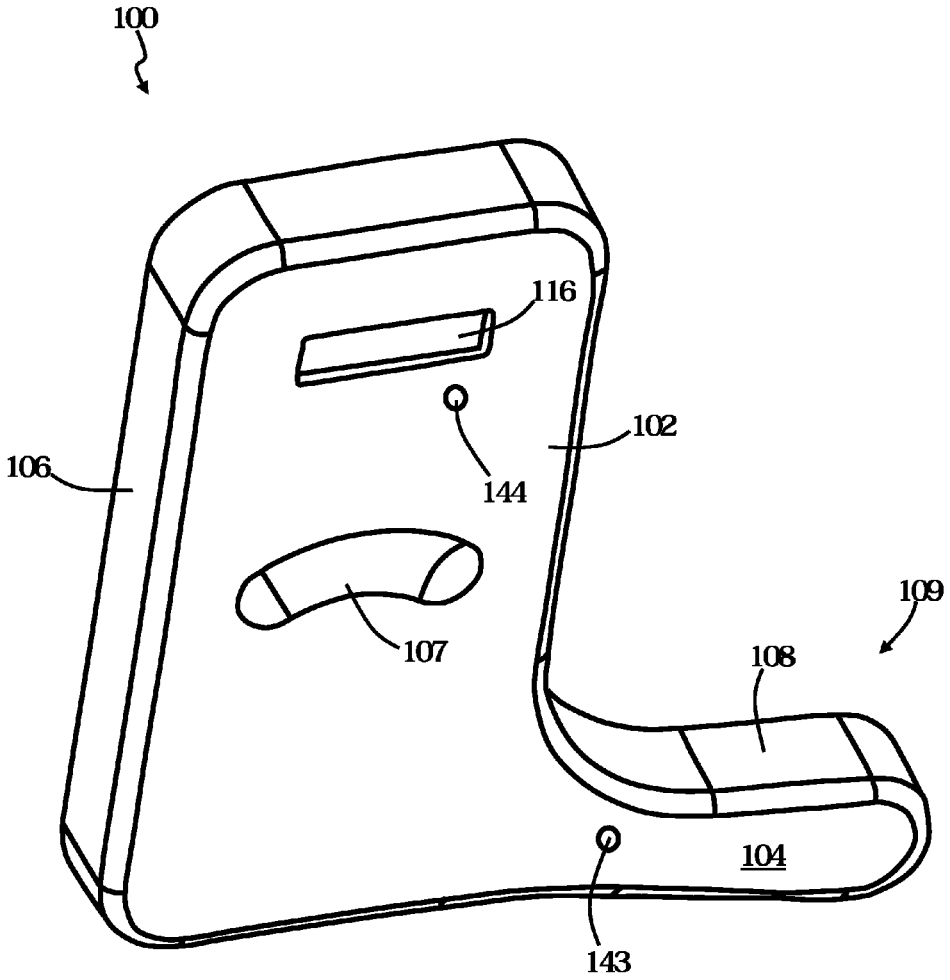

FIG. 2

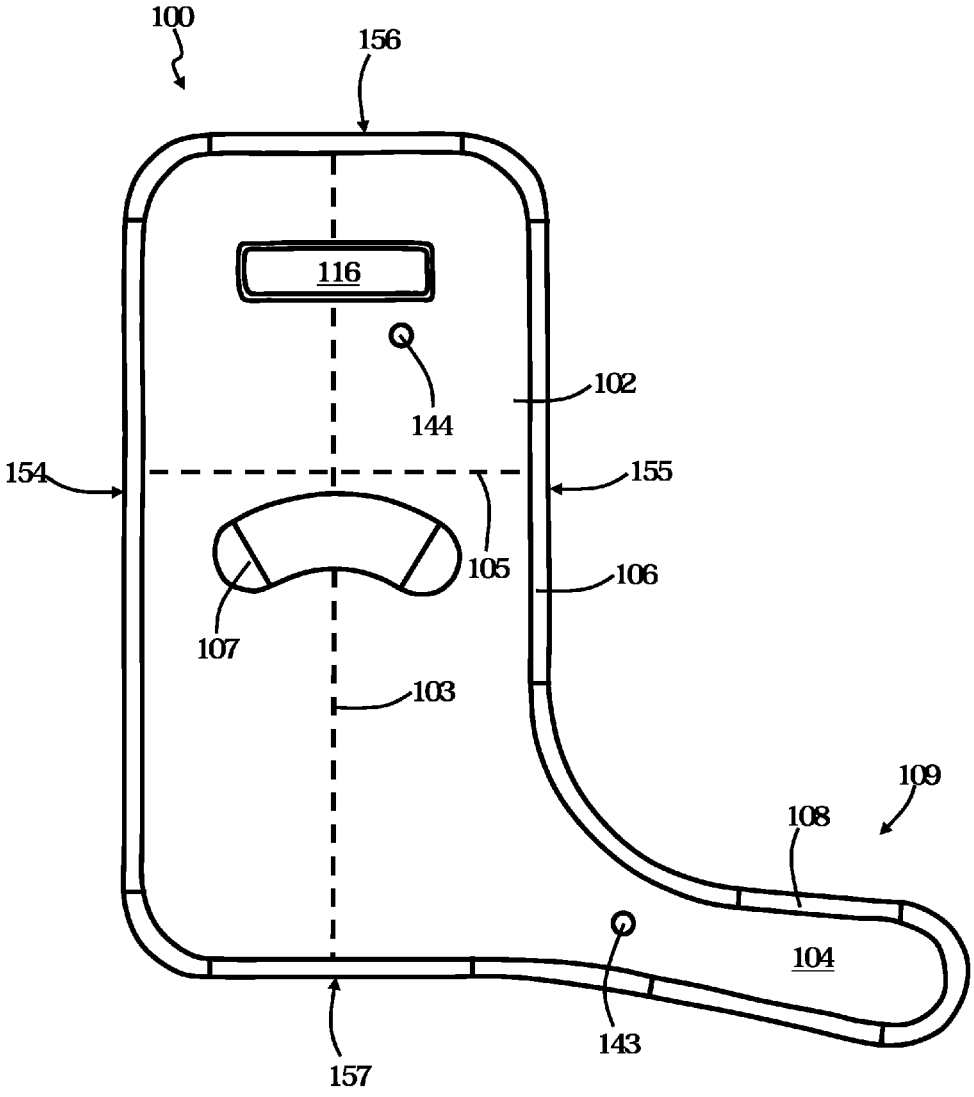

FIG. 3

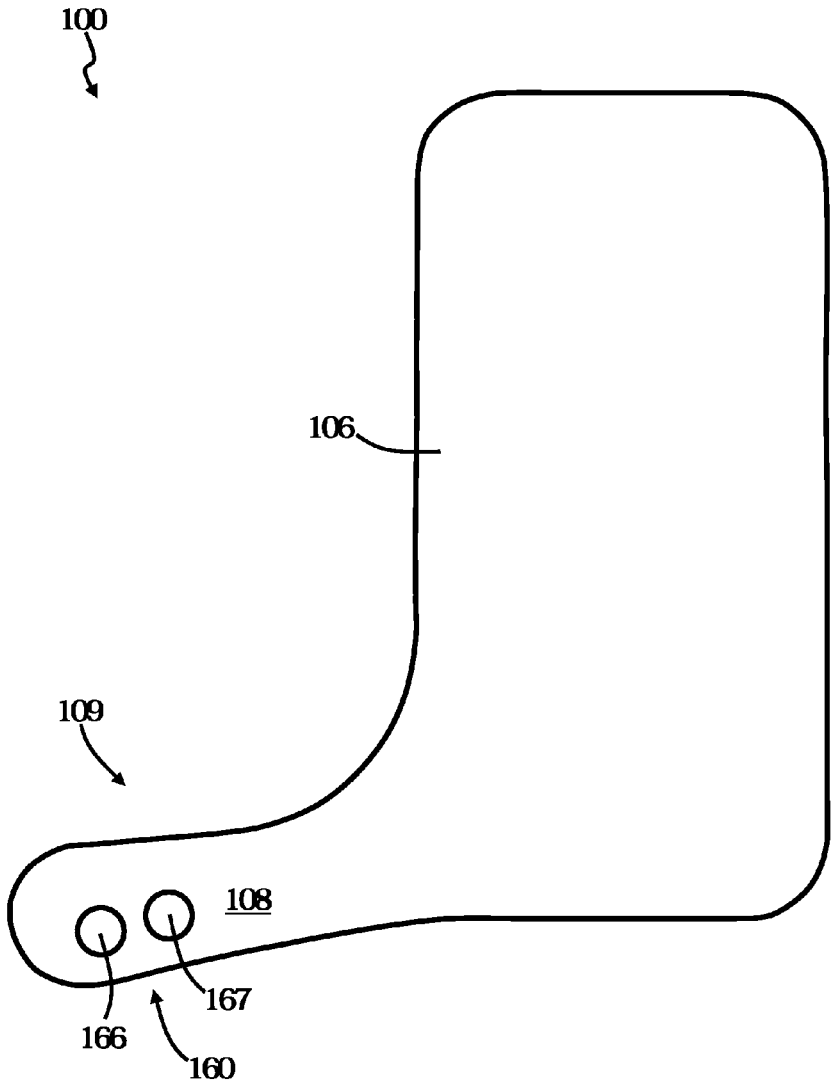

FIG. 4

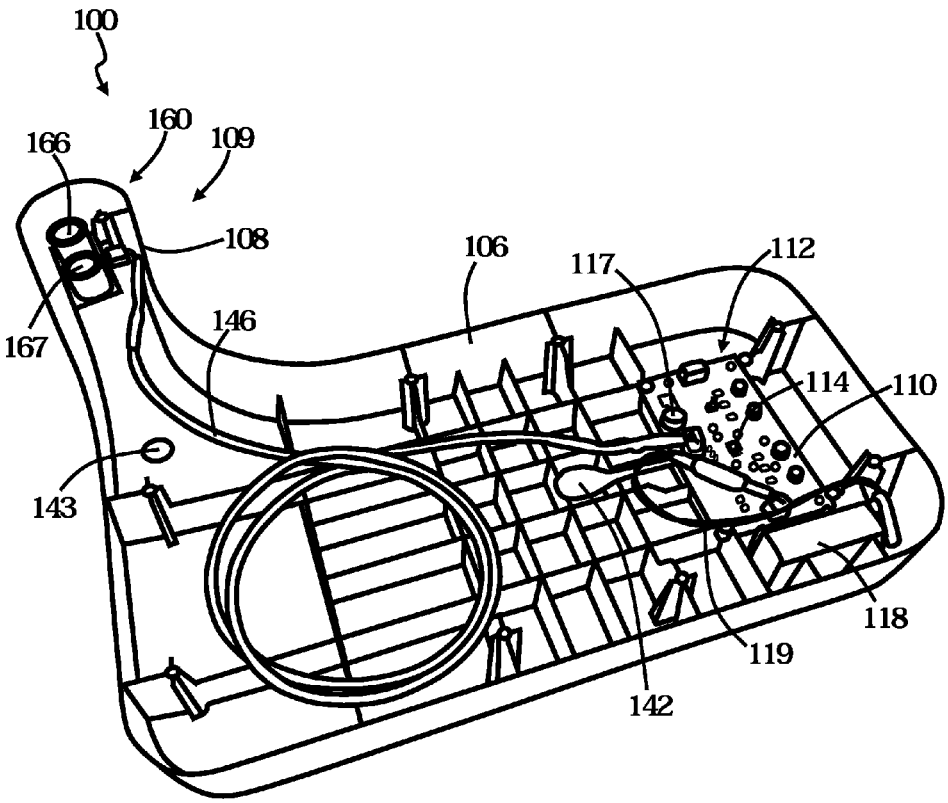

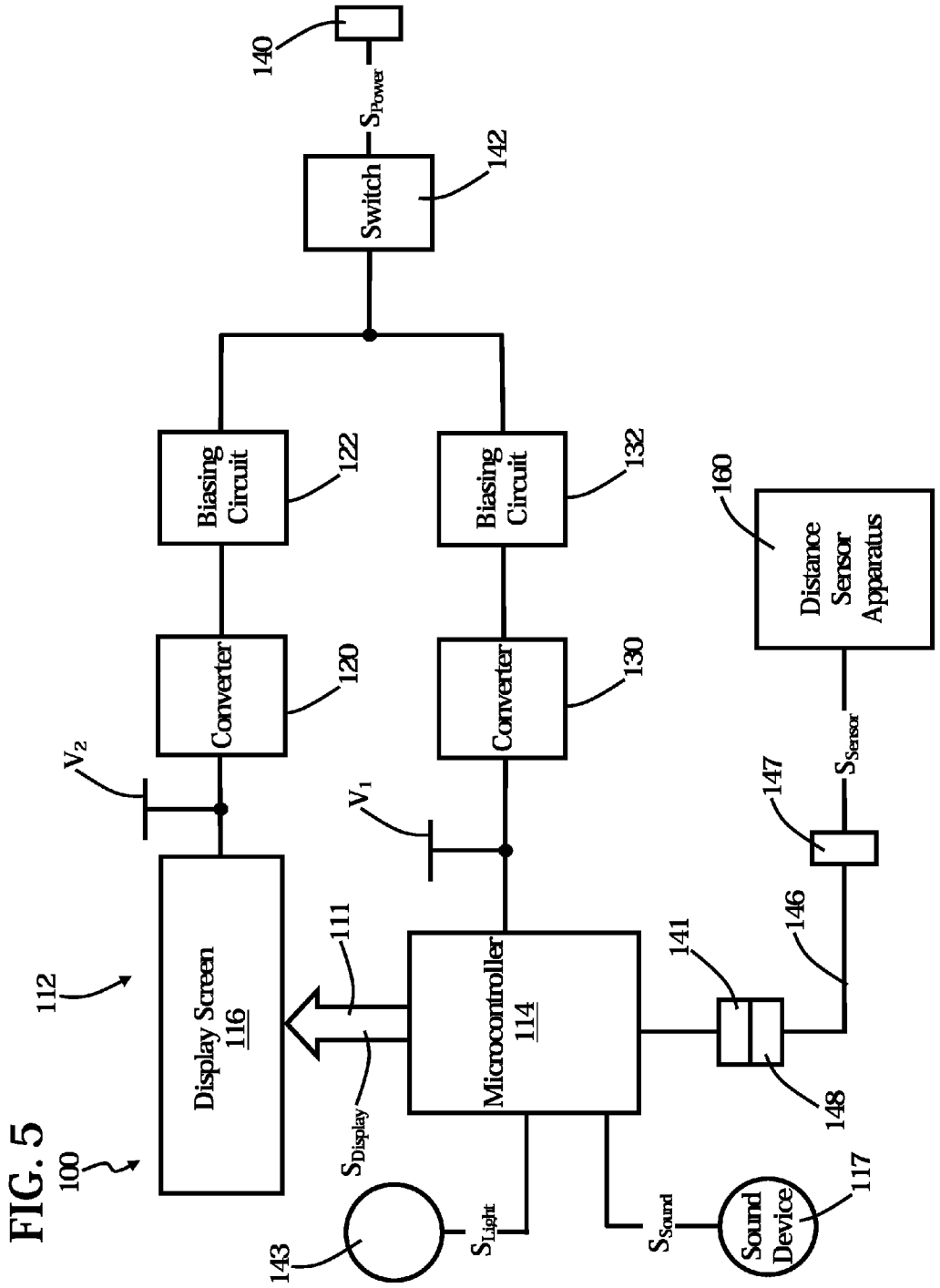
140
S_{Power}
Switch
142
Biasing Circuit
122
Biasing Circuit
132
Distance Sensor Apparatus
160
Converter
120
Converter
130
V_2
V_1
147
S_{Sensor}
112
Display Screen 116
111
Microcontroller 114
141
146
100
$S_{Display}$
148
143
S_{Light}
S_{Sound}
Sound Device
117

FIG. 5

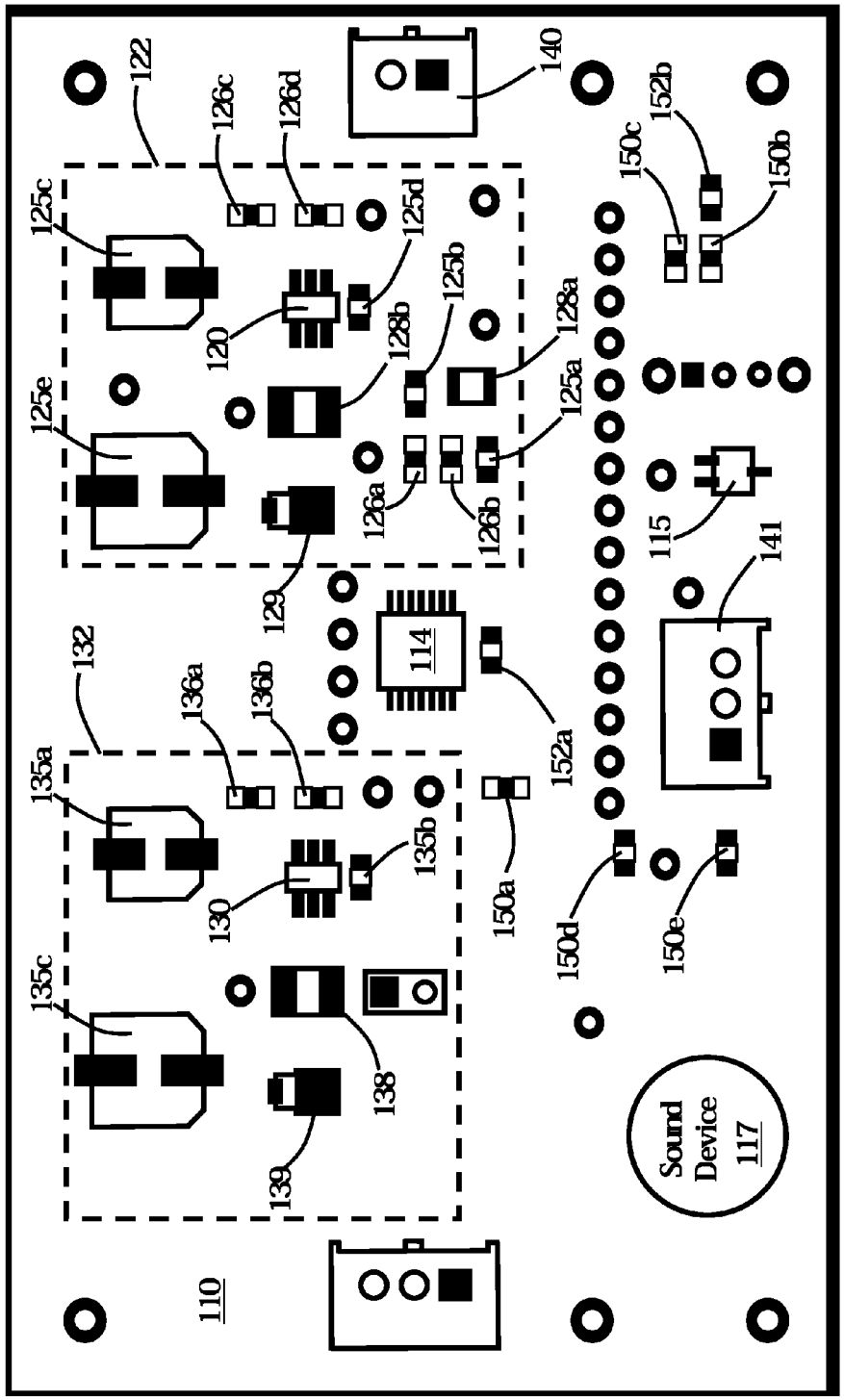
112
110
122
126c
126d
140
125c
125d
120
128b
125b
128a
125e
125a
126a
126b
115
129
114
141
132
136a
136b
152a
135a
135b
130
150a
150c
152b
150b
135c
138
150d
150e
139
Sound Device 117

FIG. 6a

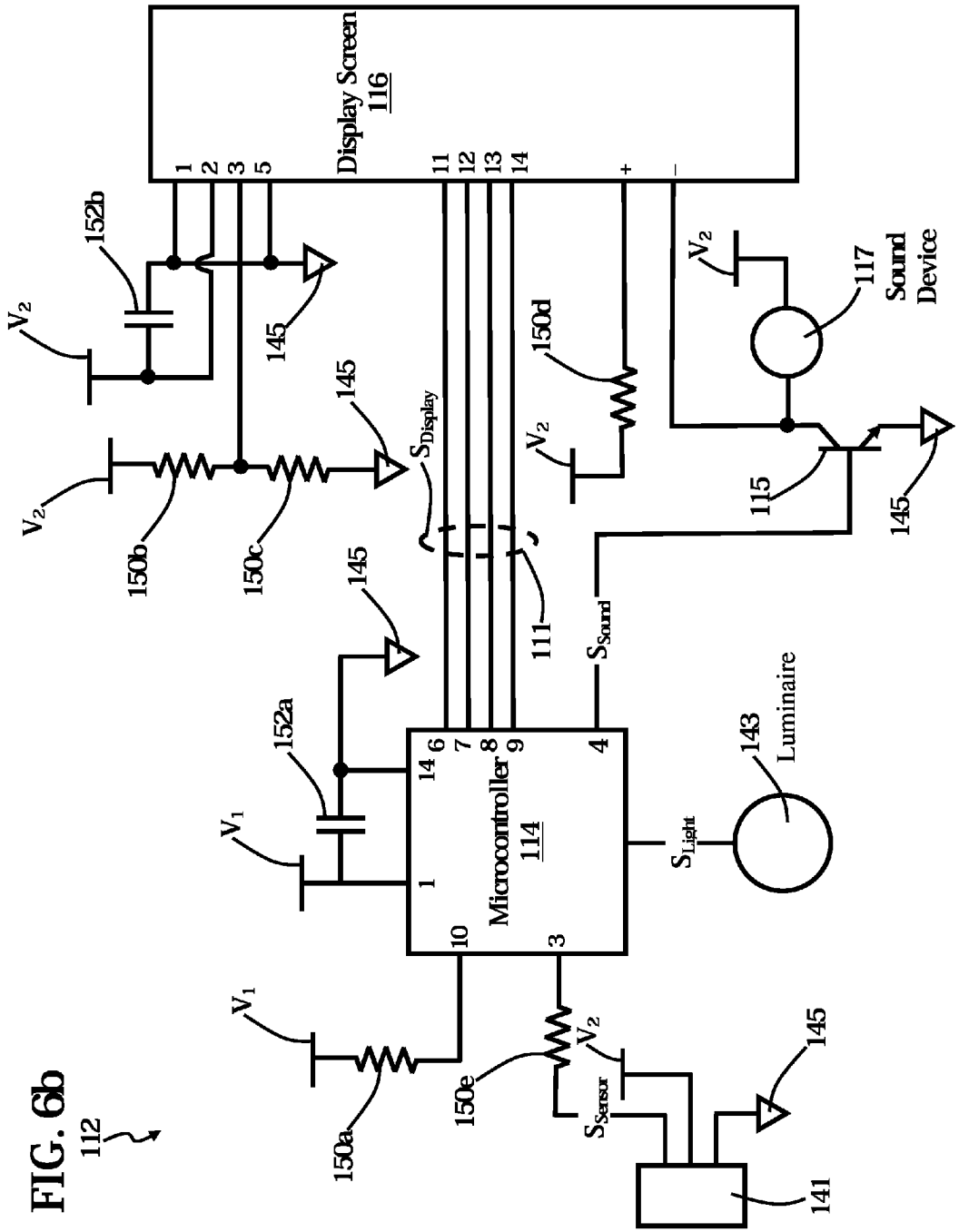
Display Screen
116
1
2
3
5
11
12
13
14
+
−
152b
V2
145
150b
150c
SDisplay
150d
117
Sound
Device
115
111
SSound
152a
V1
Microcontroller
114
6
7
8
9
4
14
1
10
3
SLight
143
Luminaire
150a
150e
SSensor
141
112

FIG. 6b

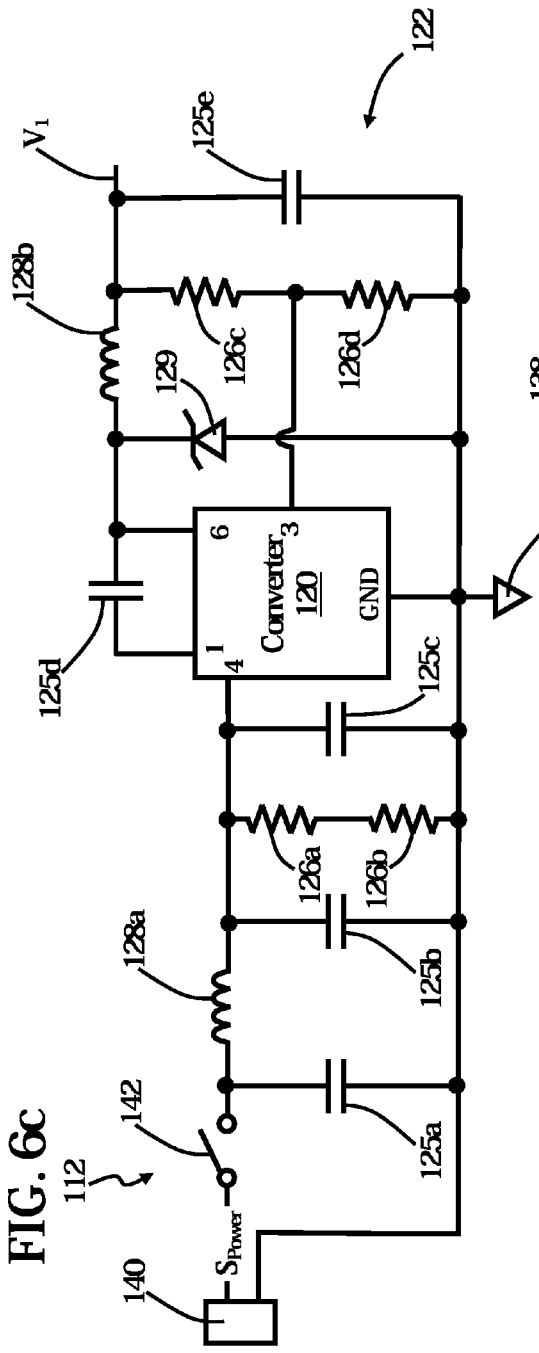
122
V_1
125e
128b
126c
126d
129
Converter 120
GND
145
125d
125c
126a
126b
128a
125b
142
112
125a
S_{Power}
140

FIG. 6c

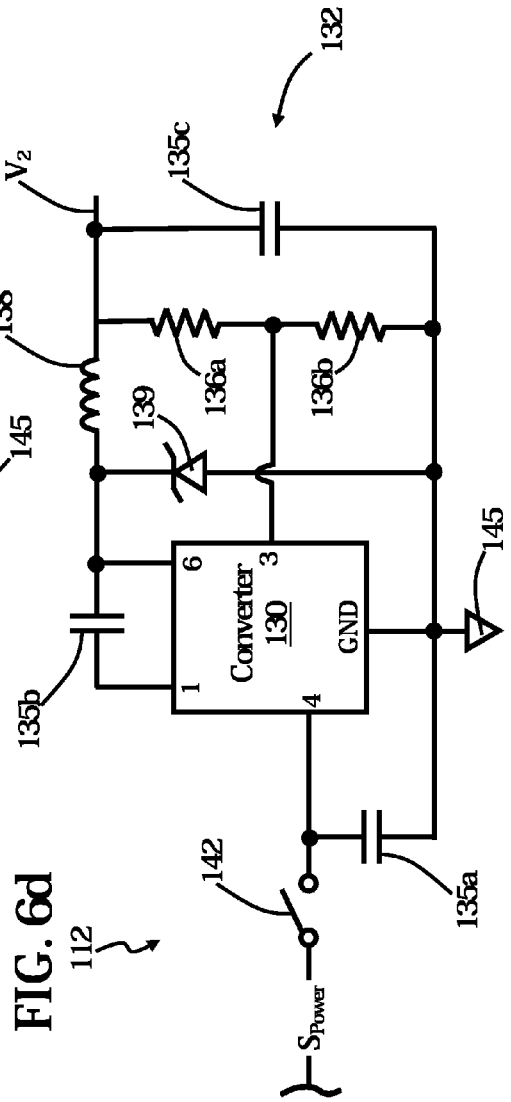
132
V_2
135c
138
136a
136b
139
Converter 130
GND
145
135b
142
112
135a
S_{Power}

FIG. 6d

FIG. 7

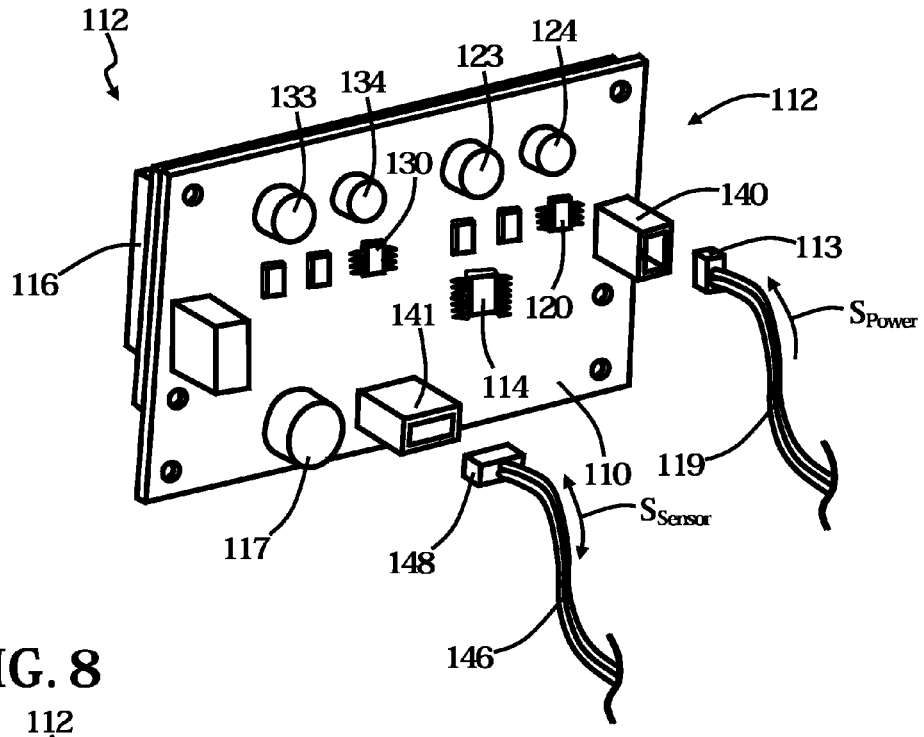
112
124
123
133
134
112
130
140
113
116
141
120
S_{Power}
114
110
119
S_{Sensor}
117
148
146

FIG. 8

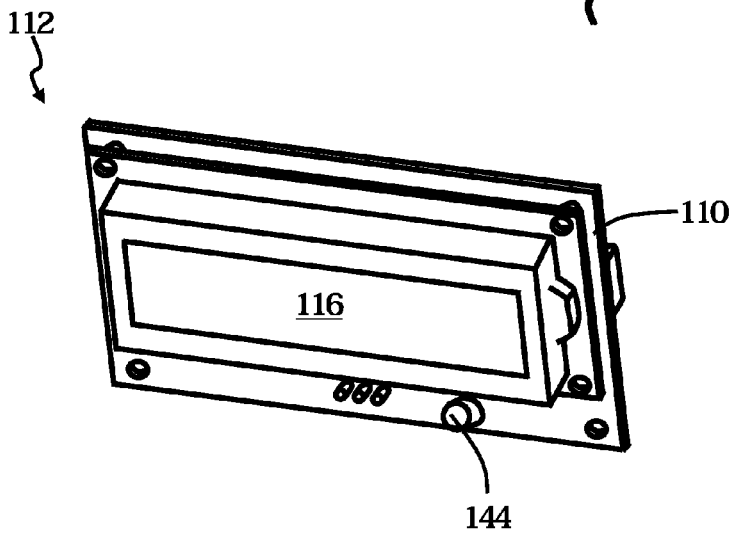
112
110
116
144

FIG. 9

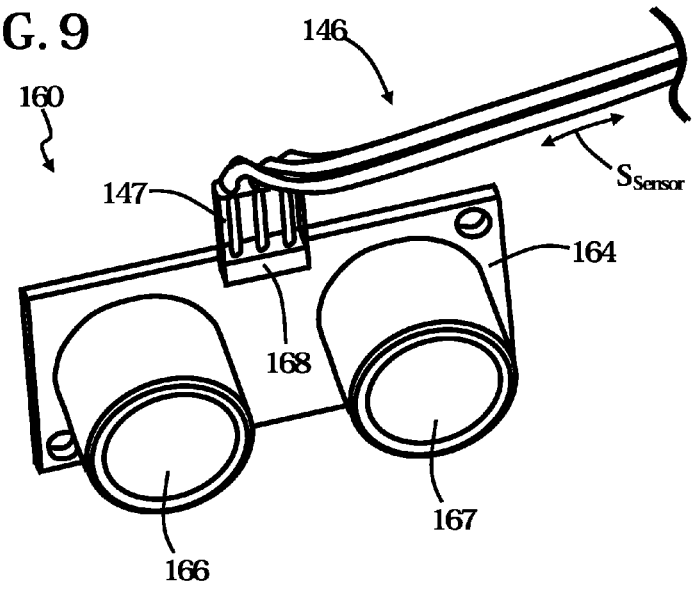
146
160
147
S_{Sensor}
164
168
167
166

FIG. 10

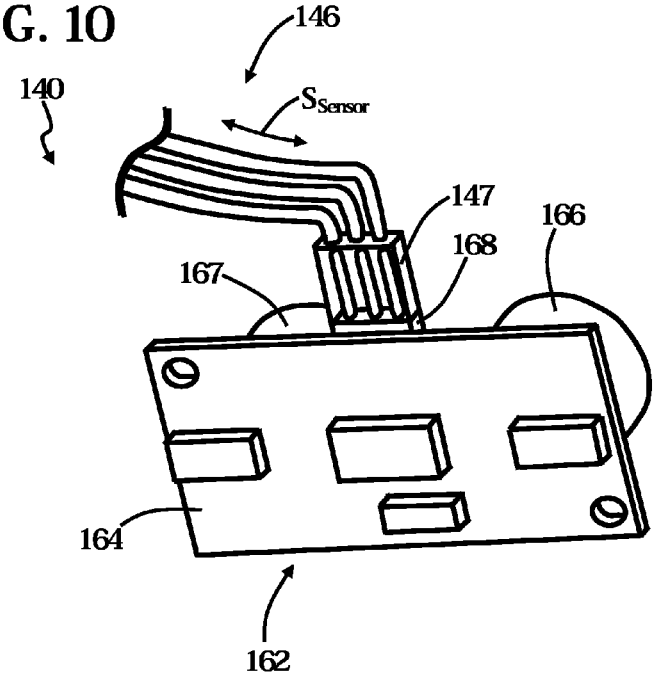
146
140
S_{Sensor}
147
166
168
167
164
162

FIG. 11

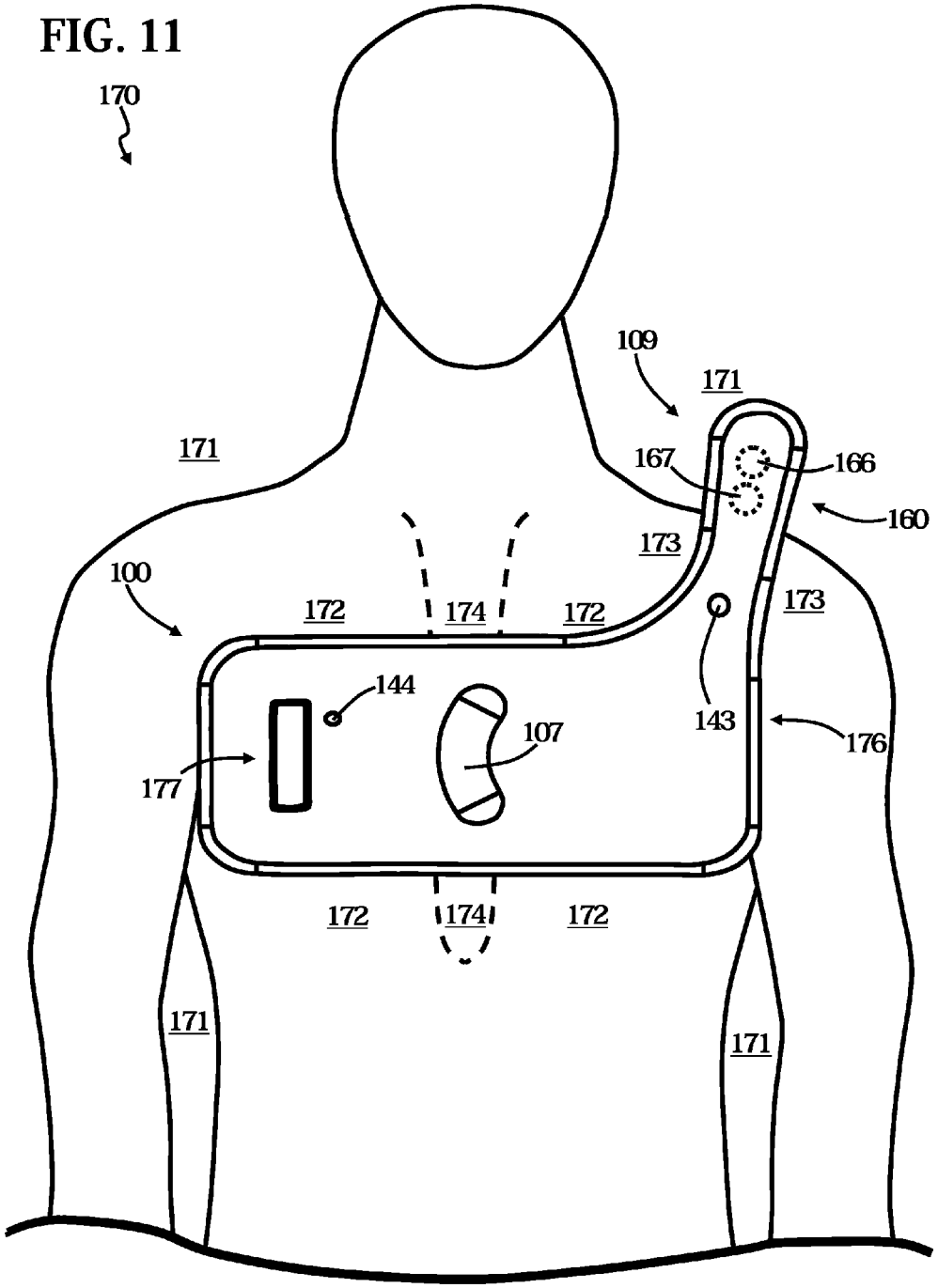
170
109
171
171
167
166
160
173
100
172
174
172
173
144
143
107
176
177
172
174
172
171
171

FIG. 12a

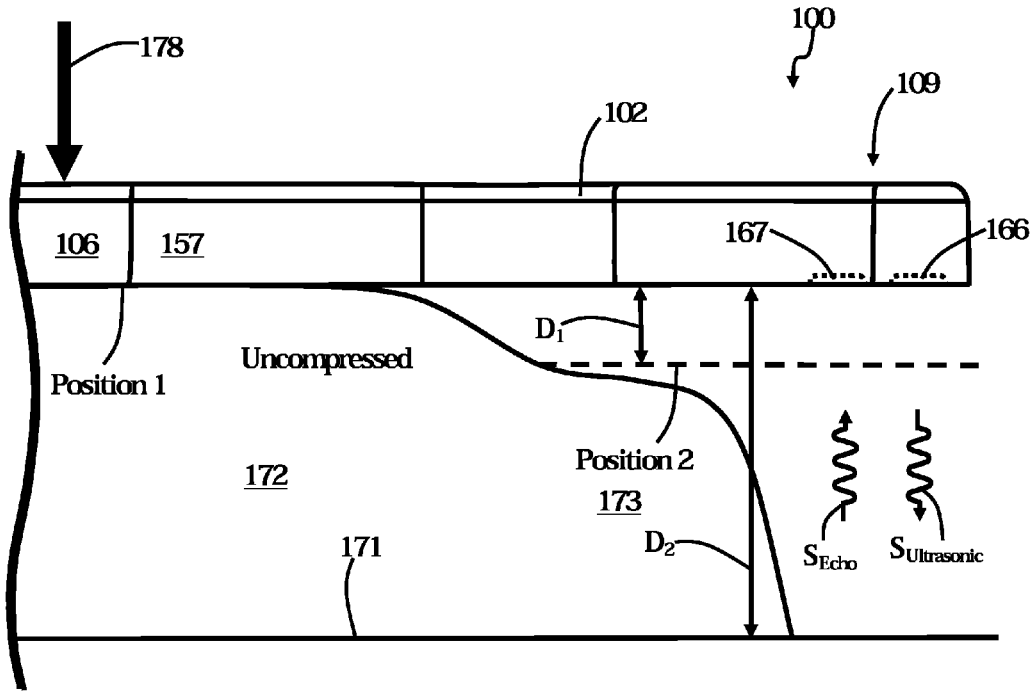

FIG. 12b

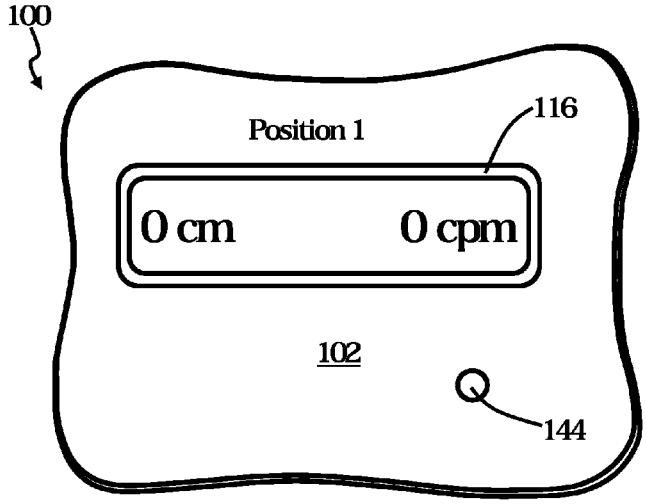

FIG. 13a

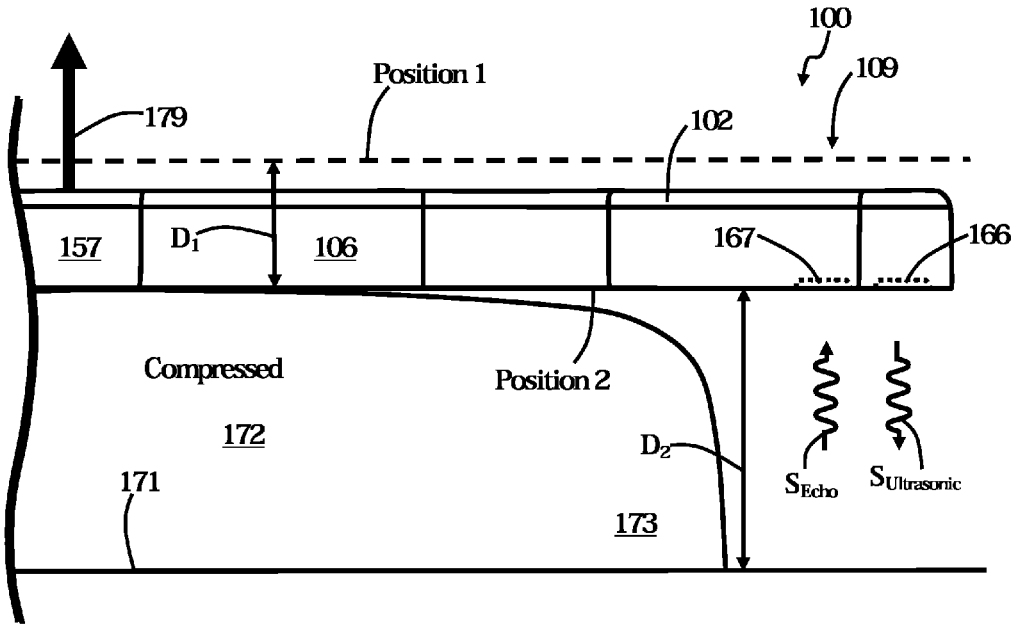

FIG. 13b

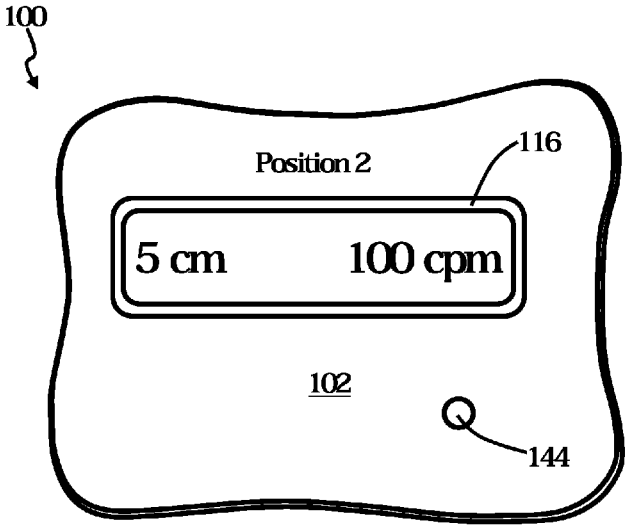

CARDIOPULMONARY RESUSCITATION DEVICE

BACKGROUND OF THE INVENTION

1. Field of the Invention

This invention relates generally to an artificial resuscitation device.

2. Description of the Related Art

Cardiopulmonary resuscitation (CPR) is an emergency procedure that involves the compression and decompression of the thoracic cavity in response to pressure applied to the sternum. CPR is typically performed in many different emergency situations, such as when a person is experiencing circulatory arrest (i.e. cardiac arrest) and respiratory arrest (e.g. drowning).

It is known that most people who receive CPR outside of a hospital do not survive. For example, recent statistics indicate that only about 8% of people who receive CPR outside of a hospital survive. Conversely, about 88% of those who receive CPR at a hospital do survive. One reason people do not survive when receiving CPR outside of a hospital is that the CPR is not performed correctly. In some instances, the pressure applied during compression is not applied evenly. The applied pressure often will not compress the entire thoracic cavity to get adequate pumping started. Instead, the applied pressure is applied as a sharp force to the sternum. The sternum must also be compressed/decompressed at an optimal distance and rate. The chances of a successful resuscitation are greatly reduced if the chest is compressed too deeply or in too shallow a manner. Further, in an emergency situation, people would greatly benefit from a device that is simple to use and quickly guides them through the steps necessary to successfully perform CPR. Hence, it would be desirable to provide an alternative to conventional manual CPR techniques that particularly non-medical personnel can perform properly so as to increase the likelihood of surviving.

BRIEF SUMMARY OF THE INVENTION

The present invention is directed to a cardiopulmonary resuscitation device which aids in the performance of CPR. The novel features of the invention are set forth with particularity in the appended claims. The invention will be best understood from the following description when read in conjunction with the accompanying drawings.

BRIEF DESCRIPTION OF THE DRAWINGS

It should be noted that like reference characters are used throughout the several views of the drawings.

FIG. **1** is a perspective view of a cardiopulmonary resuscitation device.

FIG. **2** is side view of the cardiopulmonary resuscitation device of FIG. **1**.

FIG. **3** is an opposed side view of the cardiopulmonary resuscitation device of FIG. **1**.

FIG. **4** is perspective view of the inside of the cardiopulmonary resuscitation device of FIG. **1** showing a circuit board, which carries control circuitry, and a distance sensor apparatus in communication therewith.

FIG. **5** is a block diagram of one embodiment of the cardiopulmonary resuscitation device of FIG. **1** showing the control circuitry and distance sensor of FIG. **4**.

FIG. **6***a* is a side view of one embodiment of the control circuitry and circuit board of FIGS. **4** and **5**.

FIG. **6***b* is a circuit diagram of a first portion of the control circuitry of FIGS. **4**, **5**, and **6***a*, wherein the first portion includes a microcontroller and display screen.

FIG. **6***c* is a circuit diagram of a second portion of the control circuitry of FIGS. **4**, **5**, and **6***a*, wherein the second portion includes a first converter and first biasing circuit, which provide a first reference potential.

FIG. **6***d* is a circuit diagram of a third portion of the control circuitry of FIGS. **4**, **5**, and **6***a*, wherein the second portion includes a second converter and second biasing circuit, which provide a second reference potential.

FIG. **7** is a perspective view of the circuit board and control circuitry of FIG. **4**.

FIG. **8** is an opposed perspective view of the circuit board and control circuitry of FIG. **4**.

FIG. **9** is a perspective view of the distance sensor apparatus of FIG. **4**.

FIG. **10** is an opposed perspective view of the distance sensor apparatus of FIG. **4**.

FIG. **11** is a front view of the cardiopulmonary resuscitation device of FIG. **1** being operated by a user when performing CPR on a patient.

FIG. **12***a* is a side view of the cardiopulmonary resuscitation device in a direction shown in FIG. **11**.

FIG. **12***b* is a partial view of the cardiopulmonary resuscitation device in a region shown in FIG. **11**.

FIG. **13***a* is a side view of the cardiopulmonary resuscitation device in the direction shown in FIG. **11**.

FIG. **13***b* is a partial view of the cardiopulmonary resuscitation device in the region shown in FIG. **11**.

DETAILED DESCRIPTION OF THE INVENTION

FIG. **1** is a perspective view of a cardiopulmonary resuscitation device **100**. FIG. **2** is side view of the cardiopulmonary resuscitation device **100** of FIG. **1**, and FIG. **3** is an opposed side view of the cardiopulmonary resuscitation device **100** of FIG. **1**. In this embodiment, the cardiopulmonary resuscitation device **100** includes a cover **102** and case **106**, which are coupled together in a repeatably removeable manner. In this embodiment, the case **102** includes a gripping portion **107**, which facilitates the ability to hold the cardiopulmonary resuscitation device **100** with hands.

As shown in FIG. **2**, the cardiopulmonary resuscitation device **100** has is shaped to have opposed lengthened sides **154** and **155**, and opposed shortened sides **156** and **157**. A length axis **103** and width axis **105** are shown in FIG. **2** for reference purposes only. The length axis extends between the shortened sides **156** and **157**, and the width axis extends between the opposed lengthened sides **154** and **155**. It should be noted that a lengthened side is longer than the shortened side, and a shortened side is shorter than the lengthened side. The lengthened sides **154** and **155** can have many different lengths. In some embodiments, the lengthened sides **154** and **155** are less than about eighteen inches. In some embodiments, the lengthened sides **154** and **155** are between about eight inches and eighteen inches. In general, the lengthened sides **154** and **155** are chosen to have lengths that match the chest width of a typical human.

The cover **102** and case **106** can include many different types of material, such as plastic. In some embodiments, the cardiopulmonary resuscitation device **100** includes a backing of resilient material, such as foam. The backing of resilient material can be positioned at many different locations, such as on the cover **102** and/or case **106**.

In this embodiment, the cardiopulmonary resuscitation device **100** includes an extension portion **109**, wherein the

extension portion **109** includes portions of the cover **102** and case **106**. In particular, the extension portion **109** includes a cover extension portion **104**, wherein the cover extension portion **104** is included with the cover **102**. Further, the extension portion **109** includes a case extension portion **108**, wherein the case extension portion **108** is included with the case **106**. The extension portion **109** provides the cardiopulmonary resuscitation device **100** with an L-shape. The extension portion **109** extends in a direction substantially away from the length axis **103**. The extension portion **109** extends in the same substantial direction as the width axis **105**. In this embodiment, the extension portion **109** extends from proximate to the intersection of the lengthened side **155** and the shortened side **157**. It should be noted, however, that the extension portion **109** can extend from other portions, such as the intersection of the lengthened side **154** and the shortened side **157**.

In this embodiment, and as shown in FIGS. **1** and **2**, the cardiopulmonary resuscitation device **100** includes a display screen **116**, which extends through the cover **102**. Display screen **116** will be discussed in more detail below with FIGS. **5**, **6**, **7** and **8**. The display screen **116** is carried by a circuit board **110** (FIGS. **4**, **6**, **7**, and **8**). The display screen **116** is for displaying information regarding the operation of the cardiopulmonary resuscitation device **100**.

In this embodiment, and as shown in FIGS. **1** and **2**, the cardiopulmonary resuscitation device **100** includes a pressure switch **142**, which is disposed inside the case **106**. The pressure switch **142** will be discussed in more detail below with FIGS. **5** and **8**. The pressure switch **142** can be of many different types, such as a force sensing resistor. The resistance of the force sensing resistor changes in response to an applied force.

In this embodiment, and as shown in FIGS. **1** and **2**, the cardiopulmonary resuscitation device **100** includes a luminaire **144**, which extends through the cover **102**. The luminaire **144** is useful to provide the user of the cardiopulmonary resuscitation device **100** with a visual indication that the sternum is being compressed and decompressed the desired distance. The luminaire **144** will be discussed in more detail below with FIGS. **5** and **8**.

In some embodiments, the cardiopulmonary resuscitation device **100** includes a luminaire **143**, which extends through the cover **102**. The luminaire **143** can provide the visual indication that the sternum is being compressed and decompressed the desired distance. In some embodiments, the luminaire **144** indicates when the device is on or off, and the luminaire **143** provide the visual indication that the sternum is being compressed and decompressed the desired distance.

In this embodiment, and as shown in FIG. **3**, the cardiopulmonary resuscitation device **100** includes a distance sensor apparatus **160**, which extends through the case **106**. The distance sensor apparatus **160** will be discussed in more detail below with FIGS. **4**, **5**, **9**, and **10**. The distance sensor apparatus **160** includes a receive sensor **166** and transmit sensor **167**, which extend through the case **106**. In particular, the receive and transmit sensors **166** and **167** extend through the case extension portion **108**. The receive and transmit sensors **166** and **167** can extend through the case **106** in many different ways. In this embodiment, the receive and transmit sensors **166** and **167** extend through corresponding openings of the case **106**. In general, the receive and transmit sensors **166** and **167** extend through at least one opening of the case **106**. It should be noted that the opening(s) through which the receive and transmit sensors **166** and **167** are opposed to the opening through which the display screen **116** extends (FIGS. **1** and **2**). In this way, the display screen **116** and distance sensor apparatus **160** face opposed directions.

FIG. **4** is perspective view of the inside of the cardiopulmonary resuscitation device **100** of FIG. **1** with the cover **102** removed from the case **106**. In this embodiment, the cardiopulmonary resuscitation device **100** includes the circuit board **110**, which is carried by the case **106**. The circuit board **110** carries the control circuitry **112**, which controls the operation of the cardiopulmonary resuscitation device **100**. It should be noted that the display screen **116** is positioned on the opposite side of the circuit board **110** in FIG. **4**, as is shown in FIGS. **7** and **8**.

The devices included with the control circuitry **112** will be discussed in more detail below. In this embodiment, the control circuitry **112** includes a microcontroller **114**, which controls the operation of the cardiopulmonary resuscitation device **100**. The control circuitry **112** includes a sound device **117**, which is operatively coupled to the microcontroller **114**. As will be discussed in more detail below, the sound device **117** provides a sound indication in response to receiving a sound signal S_{Sound} (FIG. **5**) from the microcontroller **114**. In this embodiment, the sound indication corresponds to an audible sound. The audible sound is within a frequency range of human hearing. The microcontroller **114** provides the sound signal S_{Sound} in response to movement of the cardiopulmonary resuscitation device **100**. The sound signal S_{Sound} is useful to provide the user of the cardiopulmonary resuscitation device **100** with an audible indication that the sternum is being compressed and decompressed the desired distance. In an embodiment, the signal S_{Sound} will also indicate that the desired distance was not reached. This might happen if the compression/decompression was done in either too shallow a manner or was done too deeply. In this case, the signal S_{Sound} can be used to generate a different sound altogether to indicate an improper action. Thus, the person performing CPR is provided auditory feedback as to whether the CPR is being done correctly or incorrectly. It should be noted that, in some embodiments, the luminaire **144** operates in response to receiving the sound signal S_{Sound}. This feature is useful so that the luminaire **144** operates when the sound device **117** operates. The luminaire **144** is provided power so it is capable of operating when the pressure switch **142** has an activated condition, as will be discussed in more detail below.

The cardiopulmonary resuscitation device **100** includes a battery **118**, which is carried by the case **106** and positioned proximate to the circuit board **110**. The battery **118** provides power to the control circuitry **112** through a battery cable **119**, as will be discussed below with FIG. **7**.

As mentioned above, the cardiopulmonary resuscitation device **100** includes the distance sensor apparatus **160**. The distance sensor apparatus **160** is carried by the case **106**, as shown in FIG. **4**. In particular, the distance sensor apparatus **160** is carried by the case extension portion **108**. The distance sensor apparatus **160** is positioned between the case extension portion **108** and the cover extension portion **104**. The distance sensor apparatus **160** is connected to the control circuitry **112** through a sensor cable **146**, as will be discussed below with FIGS. **9** and **10**.

FIG. **5** is a block diagram of one embodiment of the cardiopulmonary resuscitation device **100** of FIG. **1**. As mentioned above, the cardiopulmonary resuscitation device **100** includes the sound device **117** operatively coupled to the microcontroller **114**. The sound device **117** provides the sound indication in response to receiving the sound signal S_{Sound} from the microcontroller **114**. The microcontroller **114** provides the sound signal S_{Sound} to the sound device **117** in

response to movement of the cardiopulmonary resuscitation device **100**, as will be discussed in more detail below.

In this embodiment, the cardiopulmonary resuscitation device **100** includes the luminaire **143** operatively coupled to the microcontroller **114**. The luminaire **143** provides the visual indication in response to receiving the light signal S_{Light} from the microcontroller **114**. The microcontroller **114** provides the light signal S_{Light} to the luminaire **143** in response to movement of the cardiopulmonary resuscitation device **100**, as will be discussed in more detail below. It should be noted that, in some embodiments, the light signal S_{Light} is provided by the sound device **117** so that the sound indication and visual indication are provided a substantially the same time.

In this embodiment, the display screen **116** is operatively coupled to the microcontroller **114** through a display channel **111** so that a display signal $S_{Display}$ flows therebetween. The display signal $S_{Display}$ includes information it is desired to display on display screen **116**, as will be discussed in more detail below.

As mentioned above, the cardiopulmonary resuscitation device **100** includes the pressure switch **142**. In this embodiment, the pressure switch **142** is connected directly to the circuit board **110**, and the battery cable connector **140** is connected to the battery cable **119** (FIG. **4**) in a repeatably removeable manner. The battery **118** (FIG. **4**) provides a power signal S_{Power} to the battery cable connector **140** through the battery cable **119**.

In this embodiment, the cardiopulmonary resuscitation device **100** includes biasing circuits **122** and **132** operatively coupled to the pressure switch **142**. The pressure switch **142** is repeatably moveable between activated and deactivated conditions. In the activated condition, the pressure switch **142** allows the power signal S_{Power} to flow to the biasing circuits **122** and **132**. In the deactivated condition, the pressure switch **142** does not allow the power signal S_{Power} to flow to the biasing circuits **122** and **132**. In some embodiments, the pressure switch **142** moves from the deactivated condition to the activated condition in response to a force applied to the cardiopulmonary resuscitation device **100**. In this embodiment, the cardiopulmonary resuscitation device **100** remains in the activated condition for a predetermined amount of time.

In this embodiment, the biasing circuit **122** is in communication with a converter **120**, wherein the converter **120** is in communication with the display screen **116**. The biasing circuit **122** and converter **120** provide a potential difference V_2 to the display screen **116** when the pressure switch **142** is in the activated condition. The biasing circuit **122** and converter **120** do not provide the potential difference V_2 to the display screen **116** when the pressure switch **142** is in the deactivated condition. In this way, the display screen **116**, biasing circuit **122** and converter **120** are operatively coupled to the pressure switch **142**.

Further, the biasing circuit **132** is in communication with a converter **130**, wherein the converter **130** is in communication with the microcontroller **114**. The biasing circuit **132** and converter **130** provide a potential difference V_1 to the microcontroller **114** when the pressure switch **142** is in the activated condition. The biasing circuit **132** and converter **130** do not provide the potential difference V_1 to the microcontroller **114** when the pressure switch **142** is in the deactivated condition. In this way, the microcontroller **114**, biasing circuit **132** and converter **130** are operatively coupled to the pressure switch **142**.

The cardiopulmonary resuscitation device **100** includes the distance sensor apparatus **160**, which is connected to the control circuitry **112** through the sensor cable **146**. As will be discussed in more detail below, a sensor signal S_{Sensor} flows between the distance sensor apparatus **160** and control circuitry **112**. In particular, the sensor signal S_{Sensor} flows between the distance sensor apparatus **160** and microcontroller **114**. The sensor signal S_{Sensor} is provided in response to movement of the cardiopulmonary resuscitation device **100**. The sensor signal S_{Sensor} includes information corresponding to a distance that the cardiopulmonary resuscitation device **100** has moved.

In this embodiment, the sensor cable **146** is connected to sensor cable connectors **147** and **148** at opposed ends, wherein the sensor cable connector **147** is connected to the distance sensor apparatus **160** in a repeatably removeable manner. The control circuitry **112** includes a sensor cable connector **141** carried by the circuit board **110** (FIG. **6***a*). The sensor cable connector **148** is connected to the sensor cable connector **141** in a repeatably removeable manner. The control circuitry **112** is in communication with the distance sensor apparatus **160** so the sensor signal S_{Sensor} can flow therebetween. In particular, the microcontroller **114** is in communication with the distance sensor apparatus **160** through the sensor cable **146** and sensor cable connectors **147**, **148**, and **141**. The microcontroller **114** is in communication with the distance sensor apparatus **160** so the sensor signal S_{Sensor} can flow therebetween. In this way, the control circuitry **112** is in communication with the distance sensor apparatus **160**.

FIG. **6***a* is a side view of one embodiment of the control circuitry **112** carried by the circuit board **110** (FIG. **4**). The circuit board **110** can be of many different types of circuit boards. In this embodiment, the circuit board **110** is a printed circuit board. As will be discussed in more detail below with the circuit diagrams of FIGS. **6***b*, **6***c*, and **6***d*, the control circuitry **112** includes a plurality of electrical components. The electrical components include conductive pins and/or terminals that extend through openings of the circuit board **110**, and are soldered thereto. The pins and terminals are connected together so that the electrical components operate as a circuit.

The electrical components of the control circuitry **112** can be of many different types. For example, the electrical components of the control circuitry **112** include a resistor. The resistor can be of many different types, such as a through-hole and surface mounted resistor. The electrical components of the control circuitry **112** include a capacitor. The capacitor can be of many different types, such as an electrolytic capacitor. Electrolytic capacitors are provided by many different companies, such as Nichicon, which provides the UWT1E100MCL1GB and UWT1E220MCL1GB aluminum electrolytic capacitors. The electrical components of the control circuitry **112** includes an inductor. The inductor can be of many different types, such as a wire wound inductor. Wire wound inductors are provided by many different companies, such as ABRACON Corporation, which provides the AISC-1210HS wire wound inductor. Taiyo Yuden provides the CB2518T331K wire wound inductor. The electrical components of the control circuitry **112** include a diode. The diode can be of many different types, such as a Schottky barrier rectifier. VISHAY Intertechnology provides the SS1P3L and SS1P4L surface mounted Schottky barrier rectifiers. The electrical components of the control circuitry **112** include a connector, such as connectors **140** and **141**. The connector can be of many different types of connectors, such as a PCB header. PCB headers are provided by many different companies, such as MOLEX, which provides the 35312 Series of pitch headers.

FIG. **6***b* is a circuit diagram of a first portion of the control circuitry **112** of FIGS. **4** and **6***a*. In this embodiment, the control circuitry includes the microcontroller **114**. The microcontroller **114** can be of many different types of microcontrollers. In this embodiment, the microcontroller **114** is a TEXAS INSTRUMENTS MSP430G2 Mixed Signal Microcontroller. A pin **10** of the microcontroller **114** is connected to the reference potential V_1 through a resistor **150***a*. A pin **1** of the microcontroller **114** is connected to the reference potential V_1, and a pin **14** of the microcontroller **114** is connected to the current return **145**. Pins **1** and **14** of the microcontroller **114** are in communication with each other through a capacitor **152***a*. A pin **3** of the microcontroller **114** is connected to a first pin of the sensor cable connector **141** through a resistor **150***e*. It should be noted that the sensor signal S_{Sensor} flows through the resistor **150***a* between the first terminal of the sensor cable connector **141** and pin **3** of the microcontroller **114**. Second and third pins of the sensor cable connector **141** are connected to the reference potential V_2 and current return **145**, respectively.

A pin **4** of the microcontroller **114** is connected to a control terminal of a transistor **115**. The transistor **115** can be of many different types. In this embodiment, the transistor **115** is an NPN transistor, which is provided by NXP as model number PDTD123Y. A first terminal of the transistor **115** is connected to the current return **145**.

The control circuitry **112** includes the sound device **117**. The sound device **117** can be of many different types. In this embodiment, the sound device **117** is a magnetic buzzer, which is provided by KOBITONE Audio Company as part number 254-EMB105-RO. The sound device **117** includes a first pin connected to the reference potential V_2, and a second pin connected to a second terminal of the transistor **115**. In this embodiment, the control circuitry **112** includes the luminaire **143**. The luminaire **143** can be of many different types, such as a light emitting diode.

The control circuit **112** includes the display screen **116**. The display screen **116** can be of many different types. In this embodiment, the display screen **116** is a NHD-0116AZ-FL-YBW liquid crystal display screen, which is provided by Newhaven Display International. The second pin of the sound device **117** is connected to a negative pin of the display screen. The control circuit **112** includes a resistor **150***d*, which is connected between the reference potential V_2 and a positive pin of the display screen **116**. Pins **6**, **7**, **8**, and **9** of the microcontroller **114** are connected to pins **11**, **12**, **13**, and **14**, respectively, of the display screen **116**. It should be noted that the connection between the pins **6**, **7**, **8**, and **9** of the microcontroller **114** and the pins **11**, **12**, **13**, and **14** of the display screen **114** form the display channel **111** (FIG. **5**) through which the display signal $S_{Display}$ flows. As will be discussed in more detail below, the display signal $S_{Display}$ can include many different types of information, such as distance and/or rate information.

The control circuitry **112** includes a resistor **150***c* with a first terminal connected to the current return **145**, and a second terminal connected to a pin **3** of the display screen **116**. The second terminal of the resistor **150***c* is connected to a first pin of a resistor **150***b*. A second pin of the resistor **150***b* is connected to the reference potential V_2. Pins **1** and **5** of the display screen are connected to the current return **145** and to a first terminal of a capacitor **152***b*. A second terminal of the capacitor **152***b* is connected to the reference potential V_2, and to a pin **2** of the display screen **116**.

As discussed above with FIG. **5**, the reference potential V_1 of FIG. **6***b* is provided by the converter **120** and biasing circuit **122**. Further, the reference potential V_2 of FIG. **6***b* is provided by the converter **130** and biasing circuit **132**. One embodiment of a circuit that provides the reference potential V_1 is shown in FIG. **6***c*, and one embodiment of a circuit that provides the reference potential V_2 is shown in FIG. **6***d*.

FIG. **6***c* is a circuit diagram of a second portion of the control circuitry **112** of FIGS. **4** and **6***a*, wherein the second portion includes the converter **120** and biasing circuit **122**. The converter **120** can be of many different types. In this embodiment, the converter **120** is an asynchronous DC-DC buck converter manufactured by BCD Semiconductor Manufacturing Limited as model number AP3211.

In this embodiment, the control circuitry **112** includes the battery cable connector **140**. A first terminal of the battery cable connector **140** is connected to a first terminal of the pressure switch **142**, and a second terminal of the battery cable connector **140** is connected to the current return **145**. The pressure switch **142** is shown in FIGS. **1**, **2**, **5** and **8**.

In this embodiment, the biasing circuit **122** includes a capacitor **125***a* with a first terminal connected to the second terminal of the pressure switch **142**, and a second terminal connected to the current return **145**. The biasing circuit **122** includes an inductor **128***a* with a first terminal connected to the first terminal of the capacitor **125***a*, and a second terminal connected to a first terminal of a capacitor **125***b*. A second terminal of the capacitor **125***b* is connected to the current return **145**.

In this embodiment, the biasing circuit **122** includes a resistor **126***a* with a first terminal connected to the first terminal of the capacitor **125***b* and a second terminal connected to a first terminal of a resistor **126***b*. A second terminal of the resister **126***b* is connected to the current return **145**. The biasing circuit **122** includes a capacitor **125***c* with a first terminal connected to the first terminal of the resistor **126***a* and a second terminal connected to the current return **145**. The converter **120** includes a pin **4** connected to the first terminal of the capacitor **125***c*, and a GND terminal connected to the current return **145**.

In this embodiment, the biasing circuit **122** includes a capacitor **125***d* with first and second terminals connected to pin **1** and **6** of the converter **120**, respectively. The biasing circuit **122** includes a diode **129** with first and second terminals connected to the pin **6** of the converter **120** and the current return **145**, respectively. The biasing circuit **122** includes an inductor **128***b* with a first terminal connected to the pin **6** of the converter **120**, and a second terminal connected to a first terminal of a resistor **126***c*. The second terminal of the resistor **126***c* is connected to a pin **3** of the converter **120**, and to a first terminal of a resistor **126***d*. A second terminal of the resistor **126***d* is connected to the current return **145**. The biasing circuit **122** includes a capacitor **125***e* with a first terminal connected to the second terminal of the inductor **128***b*, and a second terminal connected to the current return **145**. It should be noted that the second portion of the control circuitry **112** of FIG. **6***c* provides the reference potential V_1 at the first terminal of the capacitor **125***e*.

FIG. **6***d* is a circuit diagram of a third portion of the control circuitry **112** of FIGS. **4** and **6***a*, wherein the third portion includes the converter **130** and biasing circuit **132**. The converter **130** can be of many different types. In this embodiment, the converter **130** is an asynchronous DC-DC buck converter manufactured by BCD Semiconductor Manufacturing Limited as model number AP3211.

In this embodiment, the biasing circuit **132** includes a capacitor **135***a* with a first terminal connected to the second terminal of the pressure switch **142**, and a second terminal connected to the current return **145**. The first terminal of the

capacitor **135***a* is connected to a pin **4** of the converter **130**. A GND pin of the converter **130** is connected to the current return **145**.

In this embodiment, the biasing circuit **132** includes a capacitor **135***b* with first and second terminals connected to pin **1** and **6** of the converter **130**, respectively. The biasing circuit **132** includes a diode **139** with first and second terminals connected to the pin **6** of the converter **130** and the current return **145**, respectively. The biasing circuit **132** includes an inductor **138** with a first terminal connected to the pin **6** of the converter **130**, and a second terminal connected to a first terminal of a resistor **136***a*. A second terminal of the resistor **136***a* is connected to a pin **3** of the converter **130**, and to a first terminal of a resistor **136***b*. A second terminal of the resistor **136***b* is connected to the current return **145**. The biasing circuit **132** includes a capacitor **135***c* with a first terminal connected to the second terminal of the inductor **138**, and a second terminal connected to the current return **145**. It should be noted that the third portion of the control circuitry **112** of FIG. **6***d* provides the reference potential V_2 at the first terminal of the capacitor **135***c*.

FIG. **7** is a perspective view of the circuit board **110** and control circuitry **112** of FIG. **4**, and FIG. **8** is an opposed perspective view of the circuit board and control circuitry **112** of FIG. **4**. As mentioned above, the circuit board **110** carries the control circuitry **112** and display screen **116**. The control circuitry **112** is connected to the display screen **116**, and controls the operation of the display screen **116**.

In this embodiment, the control circuitry **112** is connected to the battery **118** through the battery cable **119** (FIG. **4**). In this embodiment, a battery cable connector **113** is connected to the battery cable **119**, wherein the battery cable connector **113** is repeatably moveable between connected and disconnected conditions with the battery cable connector **140**. The battery cable connector **140** is discussed in more detail above with FIGS. **5**, **6***a*, and **6***c*. The battery **118** (FIG. **4**) provides the power signal S_{Power} (FIGS. **5**, **6***c*, and **6***d*) to the battery cable connector **140** (FIGS. **5**, **6***a*, **6***b*, and **6***c*) through the battery cable **119** and battery cable connector **113**.

As mentioned above, the distance sensor apparatus **160** (FIG. **4**) is connected to the control circuitry **112** through the sensor cable **146**. The distance sensor apparatus **160** can be connected to the control circuitry **112** in many different ways. In this embodiment, a sensor cable connector **148** is connected to the sensor cable **146**, wherein the sensor cable connector **148** is repeatably moveable between connected and disconnected conditions with the sensor cable connector **141** (FIGS. **5**, **6***a*, and **6***b*). The sensor signal S_{Sensor} flows between the distance sensor apparatus **160** and the control circuitry **112** when the sensor cable connector **148** is connected to the sensor cable connector **141**. In particular, the sensor signal S_{Sensor} flows between the distance sensor apparatus **160** and microcontroller **114** through the sensor cable **146**, and sensor cable connectors **141** and **148**. The sensor signal S_{Sensor} flows between the sensor cable connector **141** and the microcontroller **114**, as shown in FIG. **6***b*.

In this embodiment, the control circuitry **112** includes the pressure switch **142** (FIGS. **1**, **2**, **5**, **8**). As discussed in more detail above, with FIG. **5**, the pressure switch **142** turns the cardiopulmonary resuscitation device **100** to the activated condition in response to a force applied thereto. In the on and off positions, the display screen **116** is in an on and off condition, respectively. Further, in the on and off positions, the control circuitry **112** is in an on and off condition, respectively.

In this embodiment, the control circuitry includes the luminaire **144** (FIG. **8**). The luminaire **144** can be of many different types of lights, such as a light emitting diode. Light emitting diodes are provided by many different manufacturers, such as CREE and Philips. Visual Communications Company (VCC) provides the VAOL-3GWY4 Superbright LED lamp. The luminaire **144** can provide many different colors of illumination, such as white, red, green, and blue, among others. It should be noted that a lens can be positioned proximate to the luminaire **144**. The lens can be of many different types, such as a Fresnel lens. The lens is useful to focus the light provided by the luminaire **144**. The lens is also useful to hold the luminaire **144** to the cardiopulmonary resuscitation device **100**. As will be discussed in more detail below, the luminaire **144** is useful to provide the user of the cardiopulmonary resuscitation device **100** with a visual indication that the sternum is being compressed and decompressed the desired distance.

FIG. **9** is a perspective view of a distance sensor apparatus **160** of FIG. **4**, and FIG. **10** is an opposed perspective view of the distance sensor apparatus **160** of FIG. **3**. The distance sensor apparatus **160** can be of many different types. In this embodiment, the distance sensor apparatus **160** is an ultrasonic distance sensor. There are many different ultrasonic distance sensors that can be used, such as the PING))) ultrasonic distance sensor, which is provided by PARALAX as model number 28015.

In this embodiment, the distance sensor apparatus **160** includes a circuit board **164**, which carries distance sensor circuitry **162** (FIG. **10**). The transmit and receive sensors **166** and **167** are carried by the circuit board **164** and operatively coupled to the distance sensor circuitry **162**. As mentioned above, the distance sensor apparatus **160** is connected to the sensor cable **146**. The distance sensor apparatus **160** can be connected to the sensor cable **146** in many different ways. In this embodiment, the distance sensor apparatus **160** includes a sensor cable connector **168**, which is carried by the circuit board **164** and connected to the distance sensor circuitry **162**. As mentioned above with FIG. **5**, the sensor cable connector **147** is connected to the sensor cable **146**. The sensor cable connector **147** is repeatably moveable between connected and disconnected conditions with the sensor cable connector **168**. The sensor signal S_{Sensor} is allowed to flow through the sensor cable **146** when the sensor cable connector **147** is connected to the sensor cable **146**.

As mentioned above, one reason people do not survive when receiving CPR outside of a hospital is because the CPR is not performed correctly. The operation of the cardiopulmonary resuscitation device **100** will now be discussed to illustrate how it facilitates the correct performance of CPR.

FIG. **11** is a front view of the cardiopulmonary resuscitation device **100** being operated by a user when performing CPR on a patient **170**, wherein the patient is supported by a support surface **171** (e.g., a floor or ground). It should be noted that the pressure switch **142** turns the cardiopulmonary resuscitation device **100** to the activated condition in response to the user applying the force thereto. The luminaire **144** moves from the deactivated condition to the activated condition in response to the user applying the force thereto. In particular, the force is applied to the cover **102**. Further, it should be noted that transmit and receive sensors **166** and **167** are shown in phantom in FIG. **11**.

In this embodiment, the cardiopulmonary resuscitation device **100** is positioned on the chest **172** of the patient **170**. In particular, the cardiopulmonary resuscitation device **100** is positioned on the chest **172** of the patient **170** so the case **106** extends across a sternum **174** of the patient **170**. It should be

noted that the chest **172** is typically resilient, so it moves back into shape after being compressed. In this way, chest **172** forms a resilient surface.

In this embodiment, the cardiopulmonary resuscitation device **100** is positioned on the chest **172** of the patient **170** so the extension portion **109** extends away from the chest **172**. In particular, the cardiopulmonary resuscitation device **100** is positioned on the chest **172** of the patient **170** so the extension portion **109** extends away from the sternum **174**. The extension portion **109** extends away from the sternum **174** and over a shoulder **173** of the patient **170**. The extension portion **109** extends over the shoulder **173** so that the distance sensor apparatus **160** faces the support surface **171**. In particular, the extension portion **109** extends over the shoulder **173** so that the transmit sensor **166** and receive sensor **167** face the support surface **171**. The extension portion **109** extends away from the chest **172** so the distance sensor apparatus **160** is held away from the chest **172**.

FIG. **12***a* is a side view of the cardiopulmonary resuscitation device **100** in a direction **176** of FIG. **11**, and FIG. **12***b* is a partial view of the cardiopulmonary resuscitation device **100** in a region **177** of FIG. **11**. The cardiopulmonary resuscitation device **100** is shown positioned on the chest **172** in FIG. **12***a* in the same orientation shown in FIG. **11**. It should be noted that the shortened side **157** is shown when looking in the direction **176**. Further, it should be noted that the transmit and receive sensors **166** and **167** are shown in phantom in FIG. **12***a*. As will be discussed in more detail below, the transmit and receive sensors provide an ultrasonic pulse $S_{Ultrasonic}$ and echo pulse S_{Echo}, respectively.

As will be discussed in more detail below, it is desirable to move the chest **172** between uncompressed and compressed positions in a repeatable manner. The uncompressed position is denoted as Position **1**, and the compressed position is denoted as Position **2**. Hence, it is desirable to move the chest **172** between the Positions **1** and **2** in a repeatable manner. The distance between Positions **1** and **2** is denoted as a distance D_1. Further, the distance between the Position **1** and the support surface **171** is denoted as a distance D_2.

In FIG. **12***b*, the position of the cardiopulmonary resuscitation device **100** is displayed by the display screen **116**. For simplicity and illustrative purposes, the position of the cardiopulmonary resuscitation device **100** at Position **1** is displayed as "0 cm" by the display screen **116**. As will be discussed in more detail below, the display screen will display a distance value corresponding to distance D_1 when the cardiopulmonary resuscitation device **100** at Position **2**. It should be noted that at Position **1**, the luminaire **143** does not provide light, and the sound device **117** does not provide the sound indication. It should also be noted that the distance value is provided to the display screen **116** with the display signal $S_{Display}$.

In this embodiment, the display screen **116** displays information corresponding to the rate in which the chest **172** is moving between the compressed and uncompressed positions. The information corresponding to the rate in which the chest **172** is being compressed and uncompressed is displayed in units of counts per minute (cpm). It should be noted that information corresponding to the rate is provided to the display screen **116** with the display signal $S_{Display}$. In FIG. **12***b*, the counts per minute is being displayed as "0 cpm" for simplicity and illustrative purposes. Hence, information corresponding to "0 cpm" is provided to the display screen **116** with the display signal $S_{Display}$.

In operation, and as shown in FIG. **12***a*, a force **178** is applied to the cardiopulmonary resuscitation device **100** and, in response, the cardiopulmonary resuscitation device **100** moves from the deactivated condition to the activated condition. In some embodiments, the cardiopulmonary resuscitation device **100** remains in the activated condition for a predetermined amount of time in response to the force **178** being applied thereto. The force **178** is applied to the cardiopulmonary resuscitation device **100** so that the chest **172** moves from the uncompressed position at Position **1** to the compressed position at Position **2** in response. In particular, the force **178** is applied to the cover **102** and case **106**. The force **178** is typically applied using the hands (not shown) of the user of the cardiopulmonary resuscitation device **100**.

It should be noted that the force **178** is applied more evenly across the chest **172** and sternum **174** because the cardiopulmonary resuscitation device **100** is positioned as shown in FIG. **11**. Recent medical studies show that applying the force **178** across the chest **172** and sternum **174** increases the likelihood that the patient **170** will survive. In particular, the force **178** is distributed along the length axis **103** (FIG. **2**). It is believed that distributing the force **178** along the length axis **103** increases the likelihood that the patient **170** will survive.

FIG. **13***a* is a side view of the cardiopulmonary resuscitation device **100** in the direction **176** of FIG. **11**, and FIG. **13***b* is a partial view of the cardiopulmonary resuscitation device **100** in the region **177** of FIG. **11**. The cardiopulmonary resuscitation device **100** is shown positioned on the chest **172** in FIG. **13***a* in the same orientation shown in FIG. **11**. It should be noted that the shortened side **157** is shown when looking in the direction **176**. Further, it should be noted that the transmit and receive sensors **166** and **167** are shown in phantom in FIG. **13***a*.

In operation, the distance sensor apparatus **160** provides the ultrasonic pulse $S_{Ultrasonic}$ towards the support surface **171** with the transmit sensor **166**, and the distance sensor apparatus **160** receives the echo pulse S_{Echo} with the receive sensor **167** in response. It should be noted that the echo pulse S_{Echo} corresponds to the ultrasonic pulse $S_{Ultrasonic}$ being reflected by the support surface **171**. The distance sensor apparatus **160** provides the ultrasonic pulse $S_{Ultrasonic}$ and receives the echo pulse S_{Echo} in response to the cardiopulmonary resuscitation device **100** being moved between Positions **1** and **2**.

The sensor signal S_{Sensor} is provided to the microcontroller **114** by the distance sensor apparatus **160** in response to the ultrasonic pulse $S_{Ultrasonic}$ being transmitted. The sensor signal S_{Sensor} is terminated in response to the echo pulse S_{Echo} being received by the receive sensor **167**. The width of the echo pulse S_{Echo} corresponds to the distance D_2 the ultrasonic pulse traveled. Information corresponding to the width of the echo pulse S_{Echo} is provided to the control circuitry **112** with the sensor signal S_{Sensor}. In particular, information corresponding to the width of the echo pulse S_{Echo} is provided to the microcontroller **114** with the sensor signal S_{Sensor} (FIGS. **5**, **6***b*, and **7**). The microcontroller **114** determines the distance D_1 by determining the width of the echo pulse S_{Echo}. Information corresponding to the distance D_1 is provided to the display screen **116** by the microcontroller **114** through the display channel **111** (FIGS. **5** and **6***b*). It should be noted that information corresponding to the distance D_1 is provided to the display screen **116** with the display signal $S_{Display}$.

As shown in FIG. **13***a*, the cardiopulmonary resuscitation device **100** has moved from the Position **1** to Position **2**, which corresponds to a movement of the distance D_1. Hence, the display screen **116** displays a distance value corresponding to distance D_1. In FIG. **13***b*, the distance value is chosen to be "5 cm" because recent medical studies show that this is the optimum compression distance for CPR. Information corresponding to "5 cm" is provided to the display screen **116** in the

display signal $S_{Display}$. It should be noted that the distance value can have many other values that depend on the distance D_1 between Positions **1** and **2**. The display screen **116** will display the distance that the cardiopulmonary resuscitation device **100** has moved during CPR so that the user will know how far the chest **172** has been compressed. It is believed that the distance value of about 5 centimeters is desired to increase the likelihood that the patient **170** will survive CPR.

It should be noted that at Position **2**, the luminaire **143** does provide light, and the sound device **117** does provide sound the sound indication. In this way, the cardiopulmonary resuscitation device **100** provides a visual and audio indication that the chest **172** has been compressed a desired amount. Further, the cardiopulmonary resuscitation device **100** does not provide the visual and audio indication if the chest **172** has not been compressed the desired amount. In response to the visual and audio indication, the user removes the force **178** so that the chest **172** moves from Position **2** to Position **1**. The movement of the chest **172** from Position **2** to Position **1** is indicated by a force **179**. It should be noted that the force **179** can be from the resiliency of the chest **172**.

It should be noted that the display screen **116** displays distance values between Position **1** and Position **2** while the cardiopulmonary resuscitation device **100** is moving therebetween. Hence, in the example above, the display screen **116** will display "2.5 cm" when the cardiopulmonary resuscitation device **100** is halfway between Positions **1** and **2**. In this way, the display screen **116** displays an intermediate distance value. It should be noted that information corresponding to the intermediate distance values is provided to the display screen **116** with the display signal $S_{Display}$.

As mentioned above, the display screen **116** displays information corresponding to the rate in which the chest **172** is being compressed and uncompressed. In FIG. **13***b*, the counts per minute is being displayed as "100 cpm" for simplicity and illustrative purposes. Recent medical studies show that the rate value of about 100 cpm is desired to increase the likelihood that the patient **170** will survive CPR. In this way, the cardiopulmonary resuscitation device **100** provides the user with information corresponding to the rate of compressions. It should be noted that information corresponding to "100 cpm" is provided to the display screen **116** with the display signal $S_{Display}$.

Hence, the invention provides a cardiopulmonary resuscitation device which facilitates the ability of the user to correctly perform CPR on a patient. The cardiopulmonary resuscitation device provides a visual indication that CPR is being performed at a desired rate of compressions and decompressions. Further, the cardiopulmonary resuscitation device provides visual and audio indications that the chest of the patient has been compressed by a desired amount. The cardiopulmonary resuscitation device is also shaped so that the force applied to the chest of the patient is applied more evenly, so that the entirety of the thoracic cavity is compressed and not just one sharp point. These features of the cardiopulmonary resuscitation device allow the user to increase the likelihood that the patient will survive CPR.

The embodiments of the invention described herein are exemplary and numerous modifications, variations and rearrangements can be readily envisioned to achieve substantially equivalent results, all of which are intended to be embraced within the spirit and scope of the invention as defined in the appended claims.

The invention claimed is:

1. A cardiopulmonary resuscitation device, comprising:

a case which includes an extension portion extending therefrom;

a control circuit; and

a distance sensor apparatus operatively coupled to the control circuit, wherein in use the distance sensor apparatus extends beyond the body of a patient and holds the distance sensor apparatus away from a chest of the patient so as to measure a distance relative to a surface on which the patient is rested upon, the distance sensor providing a sensor signal (S_{Sensor}) to the control circuit in response to movement of the case during performance of cardiopulmonary resuscitation.

2. The device of claim **1**, wherein the case is sized to cover substantially entirely a thoracic cavity of an adult.

3. The device of claim **1**, wherein the control circuit includes a microcontroller which determines a distance that the case moved relative to a support surface, in response to receiving the sensor signal (S_{Sensor}).

4. The device of claim **3**, further including a sound device operatively coupled to the microcontroller, wherein the sound device provides an audible sound in response to an indication that the distance is a predetermined distance.

5. The device of claim **3**, further including a luminaire operatively coupled to the microcontroller, wherein the luminaire provides a visual indication in response to an indication that the distance is a predetermined distance.

6. The device of claim **3**, wherein the microcontroller provides a display signal to a display screen of the control circuit, the display signal corresponding to the distance that the case moved.

7. The device of claim **3**, wherein the wherein the microcontroller determines a rate that the case moves between first and second positions, the first and second positions being spaced apart by the distance.

8. The device of claim **7**, wherein the microcontroller provides a display signal to a display screen of the control circuit, the display signal corresponding to the rate that the case moves between the first and second positions.

9. The device of claim **1**, wherein the control circuit further comprises a force sensing switch that activates the device when a predetermined amount of force is applied to the case.

10. A cardiopulmonary resuscitation device, comprising:

a case;

a control circuit which includes a microcontroller and display screen; and

a distance sensor apparatus operatively coupled to the control circuit, wherein in use the distance sensor apparatus extends beyond the body of a patient and holds the distance sensor apparatus away from a chest of the patient so as to measure a distance relative to a surface on which the patient is rested upon.

11. The device of claim **10**, wherein the control circuit determines the distance value in response to receiving a sensor signal (S_{Sensor}) from the distance sensor apparatus.

12. The device of claim **10**, wherein the distance sensor apparatus provides the sensor signal (S_{Sensor}) in response to sending and receiving ultrasonic ($S_{Ultrasonic}$) and echo (S_{Echo}) signals, respectively.

13. The device of claim **12**, wherein the echo signal (S_{Echo}) is provided in response to the ultrasonic ($S_{Ultrasonic}$) being reflected on a support surface.

14. The device of claim **12**, wherein the wherein the microcontroller determines the rate that the case moves between first and second positions, the first and second positions being spaced apart by the distance value.

15. The device of claim **14**, wherein the microcontroller provides a display signal to the display screen, the display signal corresponding to the rate that the case moves between the first and second positions.

16. The device of claim 10, wherein the control circuit further comprises a force sensing switch that activates the device when a predetermined amount of force is applied to the case.

17. A cardiopulmonary resuscitation device, comprising:

a case including an extension portion extending therefrom;

a microcontroller in communication with a display screen; and

a distance sensor apparatus operatively coupled to the microcontroller, such that when in use the distance sensor apparatus extends beyond the body of a patient and holds the distance sensor apparatus away from a chest of the patient so as to measure a distance relative to a surface on which the patient is rested upon;

wherein the microcontroller determines, in response to receiving a sensor signal (S_{Sensor}) from the distance sensor apparatus, a rate that the case moves between uncompressed and compressed positions, the uncompressed and compressed positions being spaced apart by a distance.

18. The device of claim 17, wherein the uncompressed and compressed positions correspond to uncompressed and compressed positions, respectively of a chest.

19. The device of claim 17, further comprising a force sensing switch that activates the device when a predetermined amount of force is applied to the case.

* * * * *